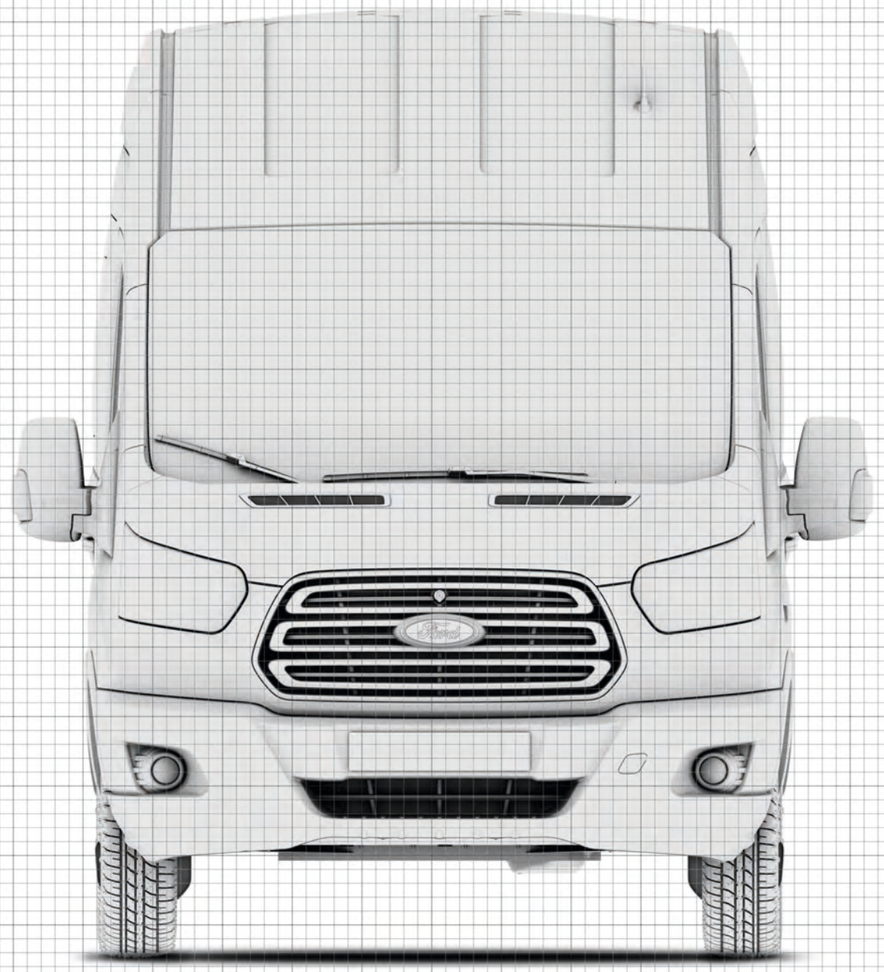

Transit Van High Roof LWB

= 200mm

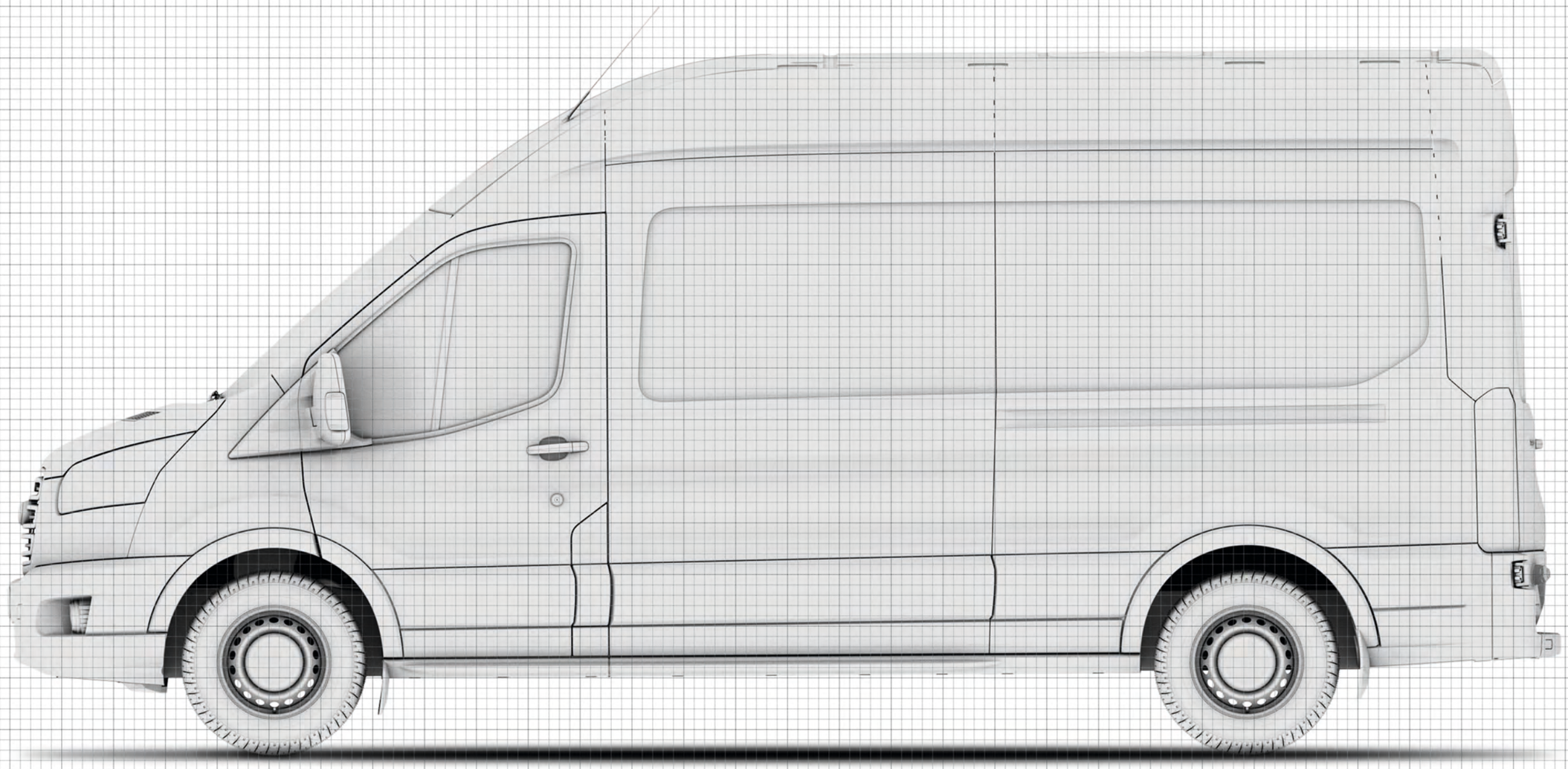

Transit Van High Roof LWB

= 200mm

burrows

3_V363_M_L_32670

Ford

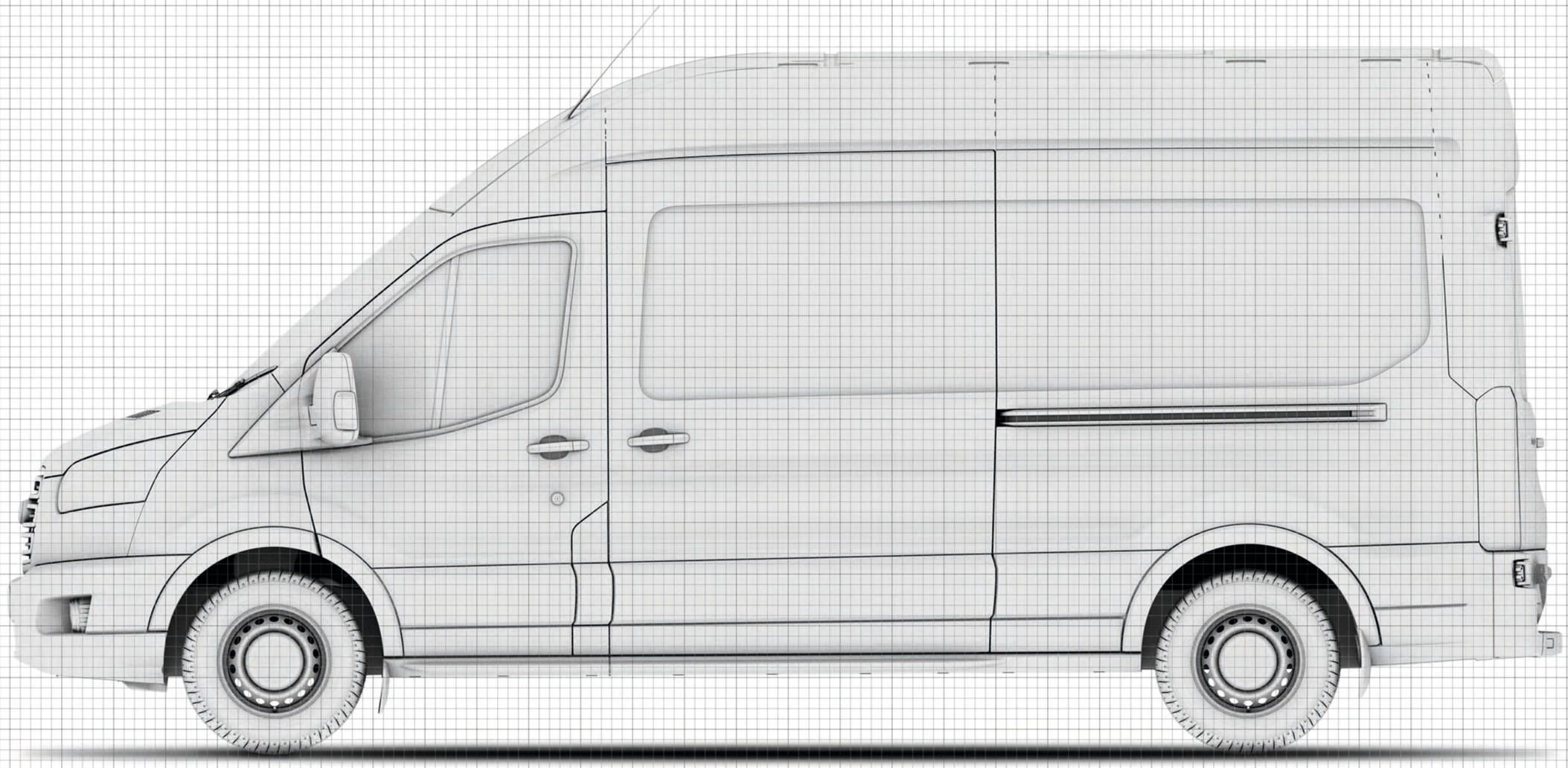

Transit Van High Roof LWB

= 200mm

burrows

3_V363_M_L_32671

Ford

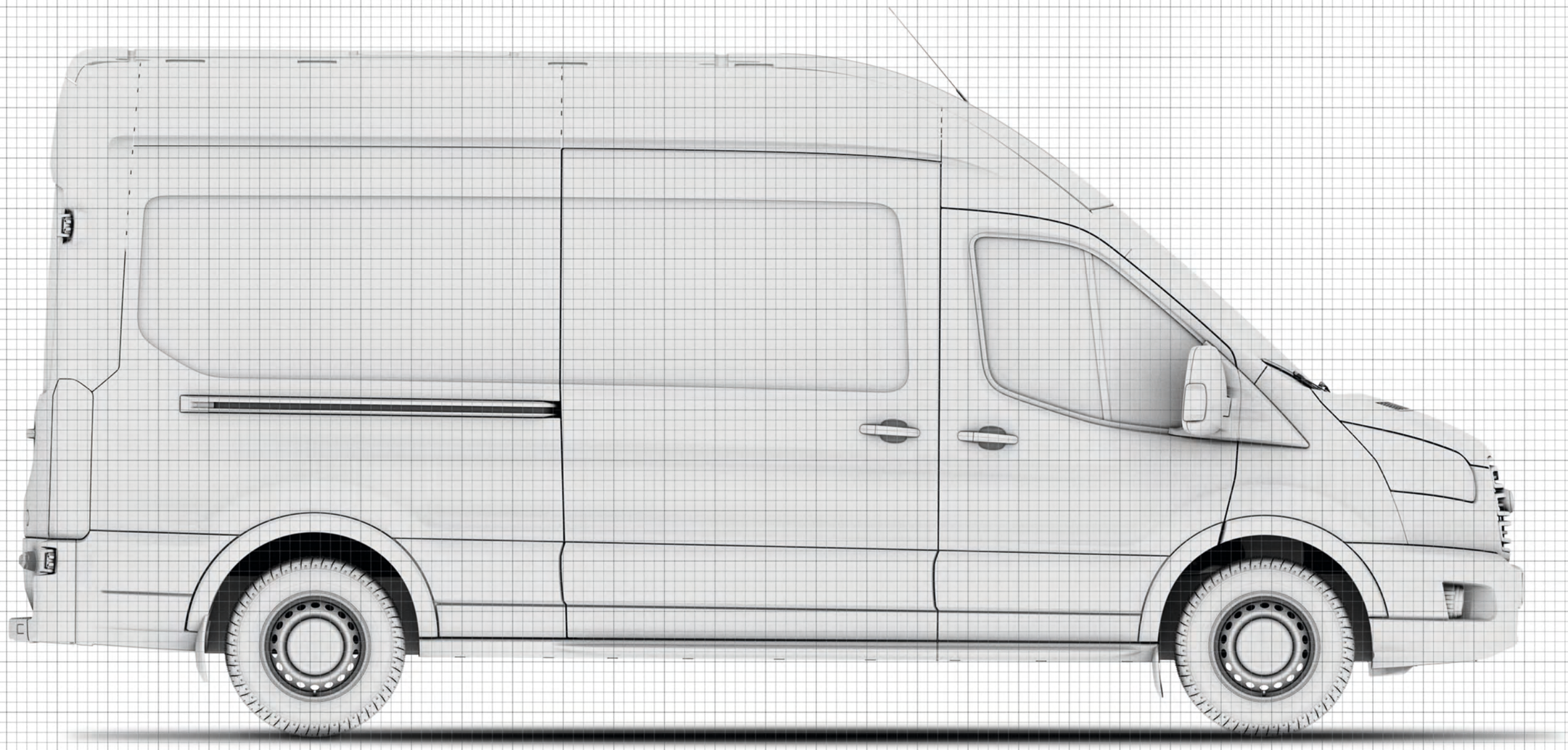

Transit Van High Roof LWB

= 200mm

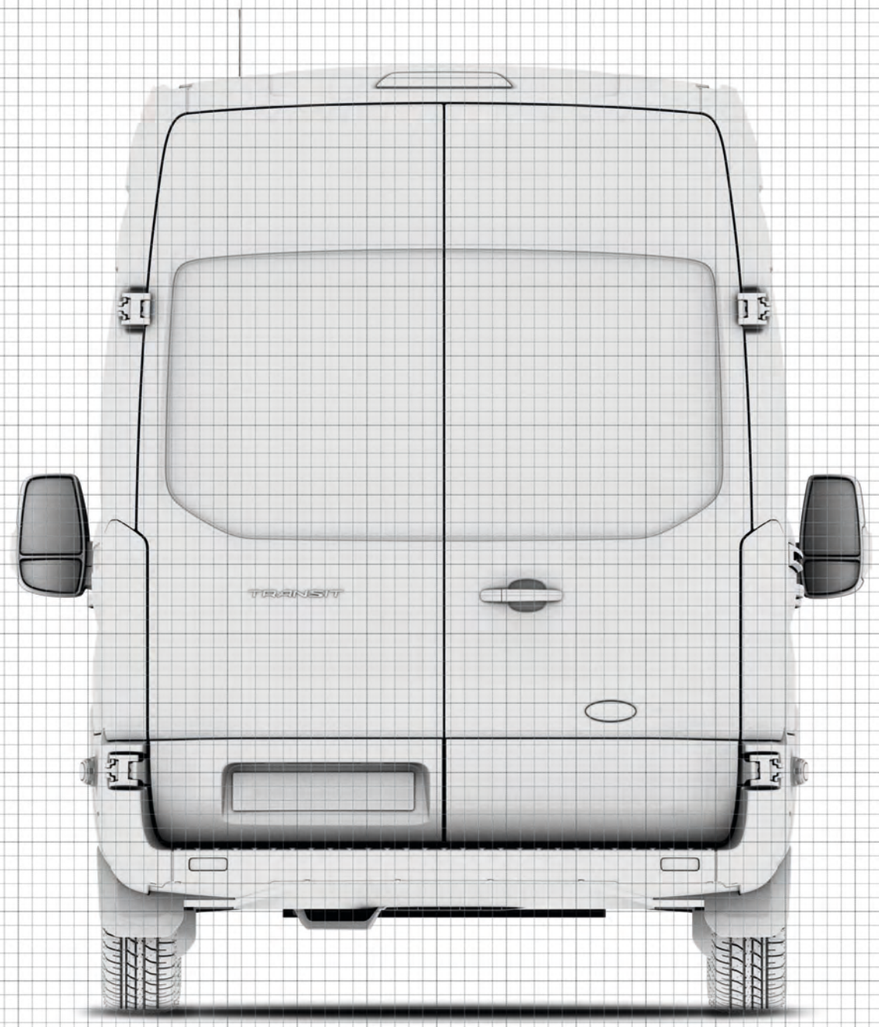

Transit Van High Roof LWB

= 200mm